PUBLISHER
YAYASAN PENDIDIKAN DAN PENGEMBANGAN HARAPAN ANANDA

JURNAL
WAWASAN DAN AKSARA

Juwara | p-issn: 2797-2097 | e-issn: 2797-2119 | **Vol. 5 No. 1 (2025)**
https://doi.org/10.58740/juwara.v5i1.399

Exploring Fashion Purchase Intentions in Digital Marketplaces: TAM Perspectives Among UNY Students

Chytra Mahanani[1](✉), Mohammad Adam Jerusalem[2]
[1,2]Universitas Negeri Yogyakarta, Indonesia

✉Correspondence Author:
chytra.mahanani@uny.ac.id

Abstract
Digital transformation has changed people's consumption patterns, especially in purchasing fashion products online. This study aims to explore the factors that influence the intention to buy fashion through the digital marketplace among students of the State University of Yogyakarta (UNY) using the Technology Acceptance Model (TAM) approach. This study uses a quantitative method with a survey design and Structural Equation Modeling (SEM) analysis techniques based on PLS. Data was collected through an online questionnaire of students using the marketplace. The results of the study show that perceived ease of use and perceived usefulness have a significant influence on students' attitudes and purchase intentions towards fashion products in the marketplace. In addition, external variables such as information quality and personalization have also been shown to influence the perception of convenience and usability. The developed research model successfully maps the relationships between variables significantly, which strengthens the validity of TAM in the context of digital purchases. These findings provide implications for MSME digital marketing strategies and the development of technology-based entrepreneurship curricula in higher education.

Keywords
digital fashion; intent to buy; marketing technology; marketplace; tam

INTRODUCTION

The development of digital technology has brought major transformations in various aspects of life, one of which is people's consumption behavior. The advent of the internet and mobile devices has changed the way individuals search, choose, and buy products, including in the fashion sector (Fahmi et al., 2023; Kirana et al., 2025). Digital marketplaces such as Shopee, Tokopedia, Lazada, and others are now the main channels

Published under CC BY-NC 4.0 | © 2025 by the authors of this article

for online shopping activities, especially among the younger generation such as college students. This phenomenon opens up in-depth research opportunities on consumer behavior in the digital ecosystem, including purchase intentions for fashion products marketed online (Fergin et al., 2024; Viola et al., 2025).

Digital marketplaces have become the main means of selling fashion products due to their ease of access, product variety, and massive digital marketing strategies. However, consumers' decision to buy fashion products online does not necessarily happen without consideration. There are a variety of factors that influence purchase intent, including perception of the platform's ease of use, perception of benefits, trust in sellers, customer reviews, product visualization, and social integration through social media (Anaya & Simina, 2023; Lysion & Zai, 2023; Uviyanti et al., 2022). This complexity demands a theoretical approach that is able to explain the process of acceptance and use of technology, such as the Technology Acceptance Model (TAM) approach developed by Davis (1989). In this context, the digital marketplace is seen as a technology, and the purchasing behavior of fashion products on the platform can be analyzed using the TAM framework (Farrasari & Amaliah, 2023; Karaveg, n.d.). The adoption of TAM in this study allowed researchers to uncover the psychological and functional factors underlying the decision of UNY students to shop for fashion online (Missy et al., 2024; Sari, 2022).

Previous research has shown that perceived usefulness has a significant influence on online purchase intentions, as consumers feel that the use of marketplace platforms can increase efficiency in shopping (Safari & Riyanti, 2023; Zahara, Mutia; Situmorang, 2022). Similarly, perceived ease of use contributes to forming a positive attitude towards the use of marketplaces, especially when the platform is designed with a user-friendly interface (Rizaldi et al., 2025). In addition, some studies have adapted the TAM model by adding external variables such as trust, information quality, and user experience to provide a more comprehensive understanding of consumer behavior (Ismet & Patrisia, 2025; Nugroho et al., 2025). In the context of UNY (Yogyakarta State University) students, the use of digital marketplaces to buy fashion products is becoming increasingly relevant considering that they are part of the digital-native generation who are familiar with technology. They have high expectations for the visual quality of the product, informative descriptions, and the credibility of the store. Therefore, it is necessary to conduct an in-depth exploration to find out the extent to which factors in TAM influence their purchase

intent, as well as how the interaction between user characteristics and marketplace features shapes purchasing behavior.

In addition, lifestyle trends and personal branding on social media also influence students' fashion preferences. Many of them make buying fashion products part of self-expression, social needs, or even investment in building a professional image (Junita et al., 2025; Rahmatika et al., 2024). The digital marketplace provides a wide range of fashion products from cheap to premium, from local to international, making it a competitive arena for manufacturers and a complex for consumers. UNY students who have a technical and artistic understanding of fashion may have different considerations than consumers in general, both in terms of aesthetics, quality, and production ethics. In this situation, the TAM approach can be enriched with a contextual understanding of the needs, values, and perceptions of UNY students.

Furthermore, this exploration also has practical implications for local fashion industry players, especially MSMEs who want to reach the student market through digital platforms. By knowing the factors that affect students' purchase intentions, business actors can develop digital marketing strategies that are more targeted, such as the use of attractive product visuals, detailed product information, and responsive interactions in the marketplace. In addition, the results of this study are also useful for the development of an entrepreneurship curriculum in the field of fashion, by including aspects of digital marketing and understanding of online consumer behavior. In the midst of rapid digitalization and increasing competition in the online market, it is important for the world of education, industry, and government to work together in developing digital literacy and technology capacity for aspiring young entrepreneurs. This research is expected to contribute to providing empirical data on the behavior of young digitally intelligent consumers, as well as strengthening the synergy between theory and practice in the context of the creative economy and digitalization of the fashion industry.

With this background, this study aims to explore the factors in the TAM framework that affect the intention to purchase fashion products through digital marketplaces by UNY students. The main focus of the research lies in the analysis of the relationship between perceived usefulness, perceived ease of use, and purchase intent, as well as the possibility of other factors relevant in the local context and student characteristics. The results of this research are expected to make a theoretical and practical contribution to the development

of digital marketing science, consumer behavior, and technology-based entrepreneurship education in Indonesia.

METHOD

This research is a survey research with a quantitative approach. In the survey study, the researcher asked several people (respondents) using an online questionnaire about the beliefs, opinions, characteristics of an object and the research population of all Fashion students who use the marketplace at UNY in purchasing fashion products. The sampling technique was taken from participants who bought fashion products using the marketplace. The sampling method in this study is my past or present convenience sampling. The purpose of this study is to investigate the Marketplace Factors and Purchase Intentions of UNY Students in Fashion Products Based on the TAM Approach. The data collection technique in this study consists of quantitative data with questionnaires made in an online survey through google form using a likert scale of 1-4. Quantitative data was obtained from Marketplace Factors with answer choices and scores that have four answer choices, namely SS (Strongly Agree), S (Agree), TS (Disagree), and STS (Strongly Disagree)

Table 1. Likert Scale Score

Sum	Variable Score
SS (Strongly Agree)	4
S (Agreed),	3
TS (Disagree)	2
STS (strongly disagree)	1

Table 2. Instrument Grille

Yes	Variable	Indicators	Item
1	External Variables	Information Offer Perzonalization Playfulness Instant Connectivity	4
2	Perceived ease of use (PEOU)	Perceived ease of use Evoke emotions and happy responses Social experience Entertainment Satisfaction	5
3	Perceived usefulness (PU)	Technology systems advantages offered by the Internet; Computer Based Technologies Consumers do their shopping anytime, anywhere, the opportunity to engage in shopping-related Activities while using mobile phones can (directly or indirectly) mobile Utilitarian shopping values (e.g. convenience, price comparisons, infinite choice and greater information	4

Yes	Variable	Indicators	Item
		availability) Internet-oriented shopping	
4	Attitude	Attitude Intent Received comprehensive empirical support in determining acceptance of a variety of Internet services The impact becomes even greater over longer periods of using technology	4
5	Behaviour Itention	Ahigh consumer interaction with computers: flow experience An enriched and enjoyable shopping experience Intensity of opening the app	4
6	Current Use	Various mobile shopping services Prices and features Purchase transaction	4

Data analysis was carried out descriptively. Descriptive analysis was used for the general demographics of the study respondents. The analysis technique used in this study is Structural Equation Modelling (SEM). The analysis of the research data was carried out with the help of R-programming running on the 2023 version of the Rstudio software.

RESULT AND DISCUSSION

A research model that illustrates the relationship between research variables and between variables and their measuring items can be seen in Figure 1. The light blue oval shape depicts the research variables, while the measuring items for each variable are depicted with a yellow rectangle. The arrow that describes the relationship between the variables is black, while the arrow that describes the relationship between the variable and its measuring items is purple.

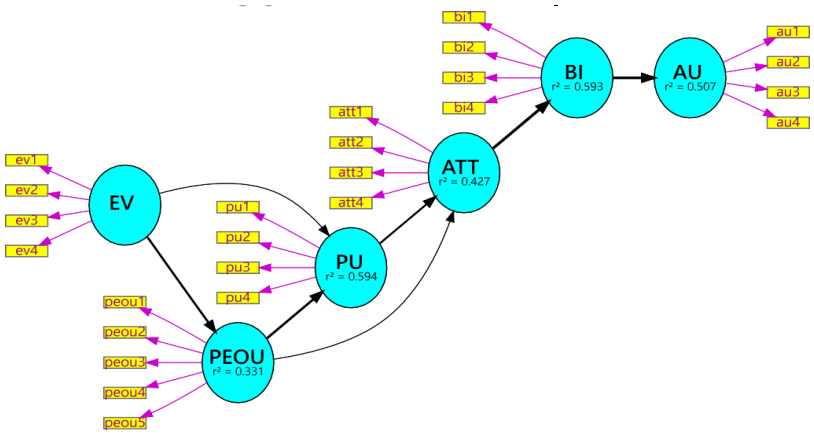

Figure 1. Diagram of Technology Acceptance Research Model Marketplace Use Model

The relationship diagram shown in Figure 1 is an overall research model. The research model in the PLS-SEM method consists of two parts, namely the outer model and the inner model. An outer model or measurement model is a model that connects research variables with their measuring items. The outer model in Figure 1 is represented by a purple arrow. An inner model or structural model is a model that connects between research variables. The inner model in Figure 1 is shown by a black arrow. The inner model in the study will test 7 direct influence relationships between research variables, namely: 1) The influence of external variables (EV) on perceived ease of use (PEOU); 2) The influence of external variables (EV) on perceived usefulness (PU); 3) The effect of perceived ease of use (PEOU) on perceived usefulness (PU); 4) The effect of perceived ease of use (PEOU) on attitude (ATT); 5) The effect of perceived usefulness (PU) on attitude (ATT); 6) The influence of attitude (ATT) on behavioral intention (BI); 7) The effect of behavioral intention (BI) on actual usage (AU).

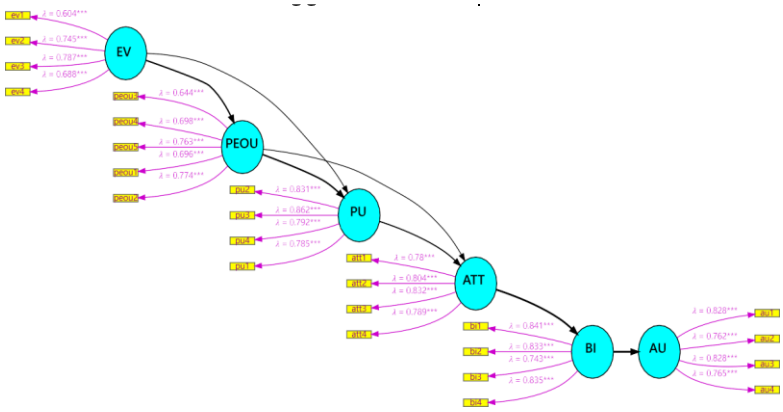

Figure 2. Diagram of Technology Acceptance Research Model Marketplace Use Model

Testing the reliability of the measurement model indicator is presented in Figure 2 The purple coefficient number in the Figure shows the value of the outer loading along with its significance level (presented in the form of a star). The value of outer loading is symbolized using the Greek letter λ (lambda). Based on the outer loading value shown in Figure 2, almost all outer loading values in each item are greater than the 0.7 criterion. Grains that have an outer loading value greater than 0.7 automatically have a very small pvalue or less than 0.05. A p-value of less than 0.05 indicates that the item is proven to be significantly representative of the variable it measures well.

There are five items that have an outer loading value of less than 0.7, namely ev1, ev4, peou1, peou3, and peou4. Although the five items have an outer loading value of less than 0.7, the outer loading value of the five items is still greater than 0.4. The p-value on the five outer loading also indicates a very small value (three stars). The p-value in the five outer loading shows significant in the 5% significance level test. This means that the five items with an outer loading value of less than 0.7 can still represent the variables they measure well. The largest and smallest outer loading values are owned by items pu3 and ev2 with an outer loading value of 0.862 and 0.604, respectively. The outer loading value in pu3 can be interpreted as that for each pu3 increase of one unit, it is predicted that there will be an increase in the perceived usefulness value of 0.862 units. The square value of the outer laoding is the magnitude of the variance of the measured variable that can be explained by the measuring item. The squared value of the outer loading of pu3 is 0.743 (the squared value of 0.862). This means that the variance of the perceived usefulness variable that can be explained through the pu3 item is 74.3%. Based on the analysis of the outer loading value, it can be concluded that all items that have been compiled in the analysis have excellent indicator reliability.

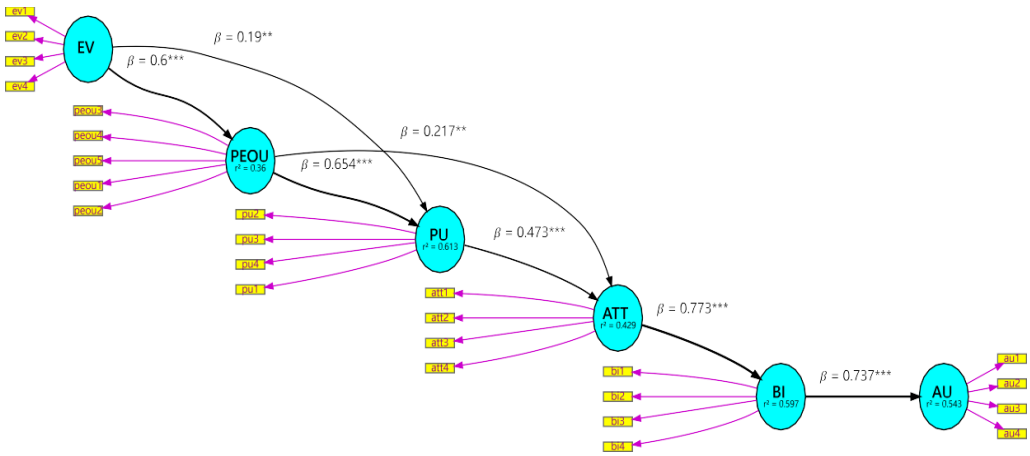

Figure 3. Diagram of Technology Acceptance Research Model Marketplace Use Model

The first structural path analysis tested the hypothesis of the influence of external variables on perceived ease of use. The initial hypothesis of research on the first structural path reads that there is no direct positive influence of external variables on perceived ease of use. The first structural path has a value of 12.648 and a p-value of less than 0.001 (marked with 3 stars). According to a value smaller than 1.96 and a p-value less than 0.05,

then the initial hypothesis of the first structural path is rejected. This means that an alternative hypothesis that there is a positive direct effect of external variables on perceived ease of use is significantly accepted. The t-value on the second structural path is 2.776 and the p-value on the second structural path is less than 0.005. A t-value greater than criterion 1.96 and a p-value less than criterion 0.05 led to the initial hypothesis of the second structural pathway to be rejected. The third structural path of the study aims to test the hypothesis of the effect of perceived ease of use on perceived usefulness of LMS use. The initial hypothesis of research on the third structural pathway is that there is no direct positive effect on perceived ease of use on perceived usefulness. The third structural line has a t-value of 10.597 and a p-value of less than 0.0001. A t-value greater than criterion 1.96 and a pvalue smaller than the 5% significance testing criterion led to the initial hypothesis being rejected. The rejection of the initial hypothesis on the third structural path causes an alternative hypothesis that there is a direct positive influence of perceived ease of use on perceived usefulness to be received significantly. he fourth structural path of the study aims to test the hypothesis of the influence of perceived ease of use on attitude. The initial hypothesis of research on the third structural path reads that there is no direct positive effect of perceived ease of use on attitude.

The fourth structural path has a t-value of 2.663 and a p-value of 0.006. Based on the provisions of hypothesis testing, the initial hypothesis of the study was rejected because it had a t-value greater than 1.96 and a p-value of less than 0.05. The rejection of the initial hypothesis of the fourth structural pathway means that the alternative hypothesis that there is a direct positive influence of perceived ease of use on perceived usefulness is significantly accepted. The t-value and p-value for the fifth consecutive structural path are 6.491 and very small less than 0.001. Based on a t-value of more than 1.96 and a p-value of less than 0.05, the initial hypothesis of the fifth structural pathway research is rejected. In other words, an alternative hypothesis that reads that there is an influence of perceived usefulness on attitude is accepted significantly.

The sixth structural pathway tests the hypothesis of the influence of attitude on behavioral intention. The initial hypothesis of the sixth structural pathway reads that there is no direct positive influence of attitude towards behavioral intention. The sixth structural line has a t-value of 22.523 and a very small p-value. Based on a t-value greater than criterion 1.96 and a pvalue smaller than criterion 0.01, the initial hypothesis of the sixth

structural path is rejected. This means that the sixth structural alternative hypothesis that there is a positive influence on attitude on behavioral intention is significantly accepted. The seventh structural path of the study aims to test the hypothesis of the influence of behavioral intention on the actual use of the Marketplace. The initial hypothesis of the research on the seventh structural path reads that there is no positive influence of behavioral intention on the actual use of the Marketplace. The seventh structural line has a t-value of 18.713 and a very small p-value (less than 0.001). Based on the test conditions, the initial hypothesis was rejected because it had a t-value greater than 1.96 and a p-value of less than 0.05. The rejection of the initial hypothesis of the fourth structural path means that an alternative hypothesis that there is a direct positive influence of behavioral intention on the actual use of the Marketplace is significantly proven.

The results of the study confirmed the key role of perceived ease of use as the main mediator between external variables and perceived usefulness (t=10.597, p<0.0001). These findings are in line with a recent study by the University of Wisconsin, which states that ease of use is a major prerequisite in shaping the perception of the usability of digital systems (Li et al., 2025). This mechanism is also found in the context of IoT adoption, where ease of use significantly increases the perception of the benefits of technology (Usman et al., 2021). External variables showed a dual influence through two pathways, namely Direct effect to perceived usefulness (t=2,776, p<0.005) and Indirect effect through perceived ease of use (t=12,648, p<0.001). This pattern is consistent with findings on e-learning systems that identify external factors such as facility conditions and system characteristics as the main drivers of technology adoption (Alontaga et al., 2024). The study on digital waqf innovation also strengthens the role of external variables through personal innovativeness (Qalbi et al., 2024). This model successfully mapped the causal chains of Perceived Usefulness → Attitude (t=6,491) → Behavioral Intention (t=22,523) → Actual Usage (t=18,713). These findings reinforce the modified TAM framework in the context of sharia fintech, where behavioral intention becomes a critical mediator between user perception and actual usage (Nurkhasanah, 2024). A t-value above 6.0 on all tracks indicates a more robust relationship strength than similar studies on music streaming platforms (Sengkandai & Mandagi, 2025). This study makes a methodological contribution through the application of SEM with goodness-of-fit values that meet the criteria, despite limitations in the geographic sample coverage. The findings are in line

with recent research developments on the adoption of e-commerce technology that emphasizes the complex interaction between technical factors and user behavior (Alontaga et al., 2024; Li et al., 2025; Nurkhasanah, 2024). Further research is needed to explore moderator variables such as digital literacy and cultural factors in the context of the global Marketplace.

CONCLUSION

This study shows that the Technology Acceptance Model (TAM) model can significantly explain the factors that affect the intention to purchase fashion products through the digital marketplace by UNY students. The results of the path analysis showed that perceived ease of use (PEOU) and perceived usefulness (PU) had a significant direct influence on attitude and subsequently on behavioral intention to actual usage. In addition, external variables such as information quality, personalization, and connectivity also contribute through direct and indirect pathways to perceived ease of use and perceived usefulness. These findings reinforce the relevance of TAM in the context of online fashion shopping and affirm that ease of use and perception of benefits are key in driving the purchase intent of young digital consumers. From a practical perspective, the results of this study provide strategic implications for fashion industry players and marketplace developers to focus on providing user-friendly interfaces, attractive product visualizations, and responsive interactions to support purchase decisions. This research also provides a foundation for the development of a digital-based entrepreneurship curriculum in higher education. For further research, it is recommended to consider moderator variables such as digital literacy, cultural factors, and expand the scope of the sample geographically to make the results more generalizing.

ACKNOWLEDGMENT

The researcher would like to thank the Rector of Universitas Negeri Yogyakarta because, through the Directorate of Research and Community Service, Universitas Negeri Yogyakarta has provided research funding assistance to researchers. Gratitude is also expressed to those who have helped with the implementation and completion of this research and article.

REFERENCES

Alontaga, J. V., Sacdalan, K., Lapinid, M. R., & Chua, V. C. (2024). A Structural Equations Model Approach to Examining University Students' Acceptance of a Learning Management System. *TEM Journal*, *13*(2), 1559–1570. https://doi.org/10.18421/TEM132-69

Anaya, N., & Simina, H. L. dan J. (2023). *Faktor-faktor yang Mempengaruhi Niat Pembelian Pelanggan*. *V*(2), 810–820.

Fahmi, M. R. Z., Winarto, & Herman. (2023). Analisis Perilaku Konsumen Produk Fashion Local Brand Erigo dalam Memutuskan Pembelian Online melalui E-commerce Shopee. *Journal Of Accounting and Business*, *2*(1), 64–71. https://doi.org/10.30649/jab.v2i1.89

Farrasari, W. R., & Amaliah, I. (2023). Pengaruh Technology Acceptance Model Terhadap Minat Masyarakat Kota Bandung dalam Berbelanja Produk Fashion di E-Commerce Shopee. *Bandung Conference Series: Economics Studies*, *3*(1), 238–245. https://doi.org/10.29313/bcses.v3i1.7083

Fergin, D., Junti, E., Fitriyasari, A., Sulistyowati, E., Tinggi, S., Ekonomi, I., & Surabaya, I. (2024). *Pengaruh Media Sosial dan Perilaku Konsumen Terhadap Keputusan Pembelian Produk Fashion Pada Generasi Z di Wilayah Mojokerto*. *1*(3).

Ismet, R. A., & Patrisia, D. (2025). *The Influence of Perceived Value , Customer Trust, and Price on Switching Intention Through Customer Satisfaction in Online Transportation Services : A Case Study of Maxim Application Among Generation Z in Padang*. *9*(1), 369–376. https://doi.org/10.36526/js.v3i2.5050

Junita, S., Yusalia, H., & Indasari, F. (2025). *Konstruksi Identitas Remaja Dalam Pemakaian Tas Branded (Studi Kasus Pada Mahasiswa FEBI Universitas Islam Negeri Raden Fatah Palembang)*. *4*(3), 1743–1751.

Karaveg, C. (n.d.). *Technology acceptance a ff ecting purchasing behavior among online apparel consumers*. *16*(4), 16–23.

Kirana, R.C., Astuti, S., & Ramli, M. (2025). *Digital Business Insights Journal*. *1*(1), 58–67. https://doi.org/10.32520

Li, Y., Jiang, C., & Abdul Rashid, S. H. (2025). A structural equation modeling approach to investigating the influence of smart kitchen appliance design features on older adults' technology acceptance. *Archives of Gerontology and Geriatrics*, *131*.

https://www.sciencedirect.com/science/article/abs/pii/S0167494325000391

Lysion, O., & Zai, I. (2023). Faktor Yang Mempengaruhi Purchase Intention Pada E-Commerce Dimediasi Oleh Brand Image. *Jurnal Manajemen Dan Akuntansi*, *19*(1), 74–91.

Missy, J., Karomi, S., Purwanto, E., Ekonomi, F., & Wiraraja, U. (2024). *Pengaruh Theory Technology Acceptance Model (Tam) Terhadap Keputusan Pembelian Spontan Pada*. *5*.

Nugroho, D. T., Indah, D. R., Novianti, H., Sanjaya, M. R., & Husni, M. (2025). *Pengaruh Penerapan Prinsip - Prinsip Usability dalam UI / UX terhadap Minat Beli Konsumen di Platform Shopee The Impact of Implementing Usability Principles in UI / UX on Consumer Purchase Intention on the Shopee Platform*. *14*, 687–701.

Nurkhasanah, Y. (2024). The Mediation Role Of Behavior Intention In Actual Use Of Shopee Barokah Yeni Nurkhasanah. *Jurnal Ilmu Manajemen Retail (JIMAT)*, *5*(2).

Qalbi, A., Sukmana, R., Ratnasari, R. T., & Sekar Sari, N. (2024). The Role Of Personal Innovativeness On Behavioral Intention Waqf Online: Extention Of Technology Acceptance Model. *Jurnal Ekonomika Dan Bisnis Islam*, *7*, 1–17.

Rahmatika, M., Salsabila, T., & Sanjaya, V. F. (2024). *Analisis swot dalam pengembangan strategi pemasaran pada produk fashion toko zelora lampung*. *35*(3), 213–234.

Rizaldi, M., Mulyono, M., & Anam, C. (2025). *Pengaruh Perceived Ease of Use Terhadap Online Shopping Intention dengan Perceived Value sebagai Mediasi*.

Safari, A., & Riyanti, A. (2023). Analisis Technology Acceptance Model (TAM) Terhadap Minat Penggunaan Mobile Banking. *Jurnal Edunomika*, *08*(01), 1–9.

Sari, N. N. (2022). The Use of Technology Acceptance Model to Explain Brand Attitude and Loyalty Intention in E-Commerce: The Gamification Case. *Asean Marketing Journal*, *14*(1). https://doi.org/10.21002/amj.v14i1.1151

Sengkandai, K. G., & Mandagi, D. W. (2025). *Analyzing Key Determinants Of Spotify Adoption : A Structural Equation Modeling Approach Based On The TAM Framework Menganalisis Faktor Penentu Utama Adopsi Spotify : Pendekatan Pemodelan*. *6*(3), 2064–2078.

Usman, B., Sentosa, I., & Nurrahmi, F. (2021). Structural equation modeling of internet of things (IoT) adoption for Indonesian Village-Owned Enterprises (BUMDes). *Informasi*, *51*(1), 169–194. https://doi.org/10.21831/informasi.v51i1.40170

Uviyanti, S., Pramuka, B. A., & Putri, N. K. (2022). Faktor-Faktor Yang Mempengaruhi Niat Pembelian Pada Sistem E-Commerce Dengan Kepercayan Sebagai Pemediasi. *Journal of Public Accounting (JPA)*, *2*(1), 1–10. https://doi.org/10.30591/jpa.v2i1.3438

Viola, D., Hasibuan, N., Chintya, N., Ramadhana, R. Z., & Zein, D. C. (2025). *Analisis Perilaku Konsumen Terhadap E - Commerce Dibidang Fashion*. *3*(1), 218–229.

Zahara, Mutia; Situmorang, S. H. (2022). The Influence of Perceived Ease of Use and Perceived Usefulness on Repurchase Intentions Through Customer Satisfaction Using Online Shopping Applications in Medan City. *Ilmiah Wahana Pendidikan*, *10*(22), 33–49. https://jurnal.peneliti.net/index.php/JIWP/article/view/10860